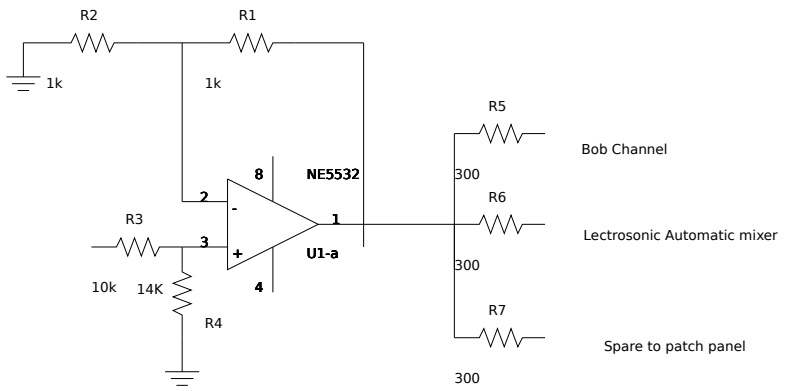
R2
R1
1k
1k
R5
Bob Channel
8
NE5532
300
2
R6
R3
1
Lectrosonic Automatic mixer
3
U1-a
300
10k
14K
4
R4
R7
Spare to patch panel
300

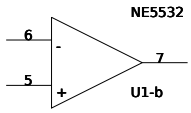
NE5532
6
7
5
U1-b