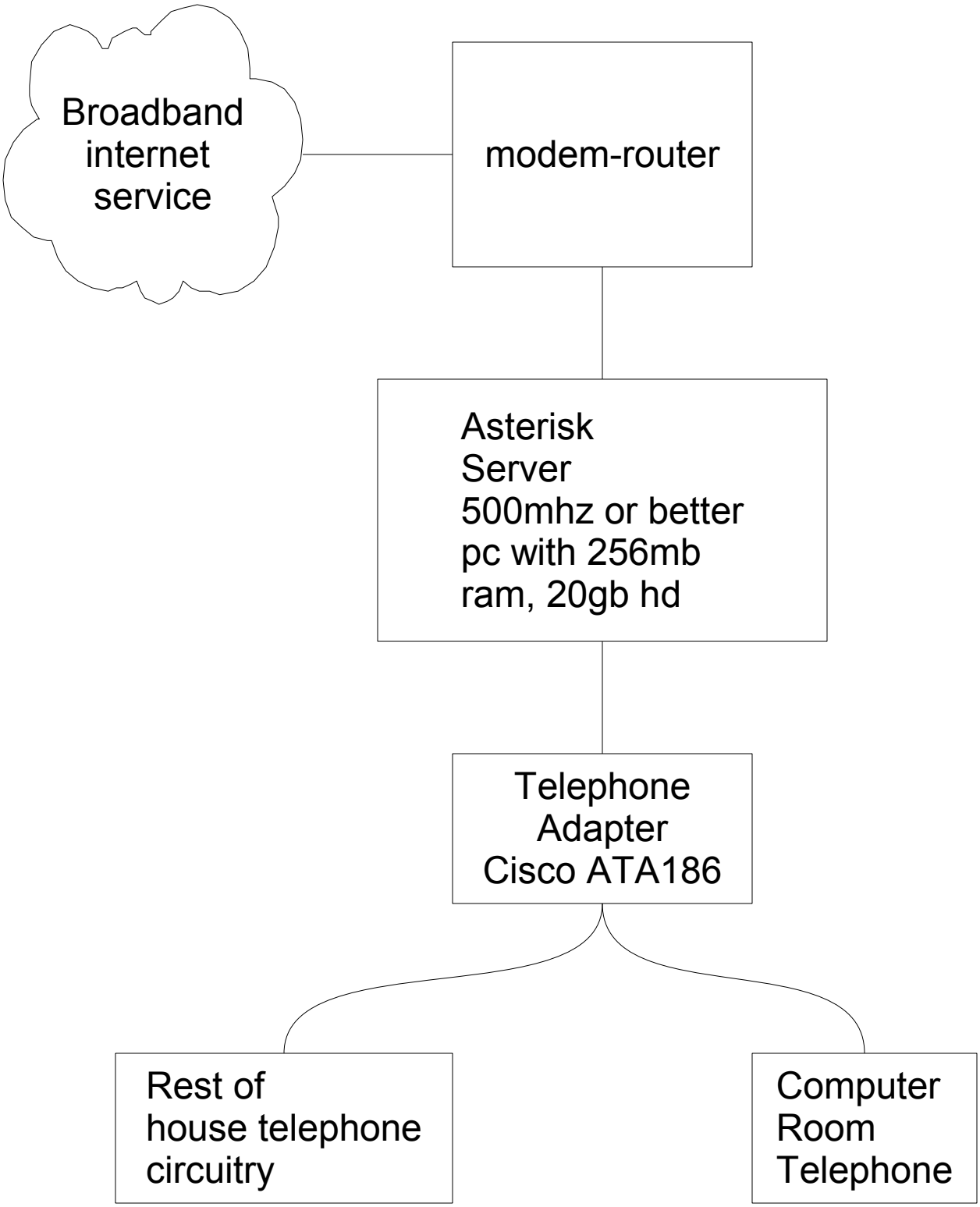

Asterisk at Home controlled Telephone system